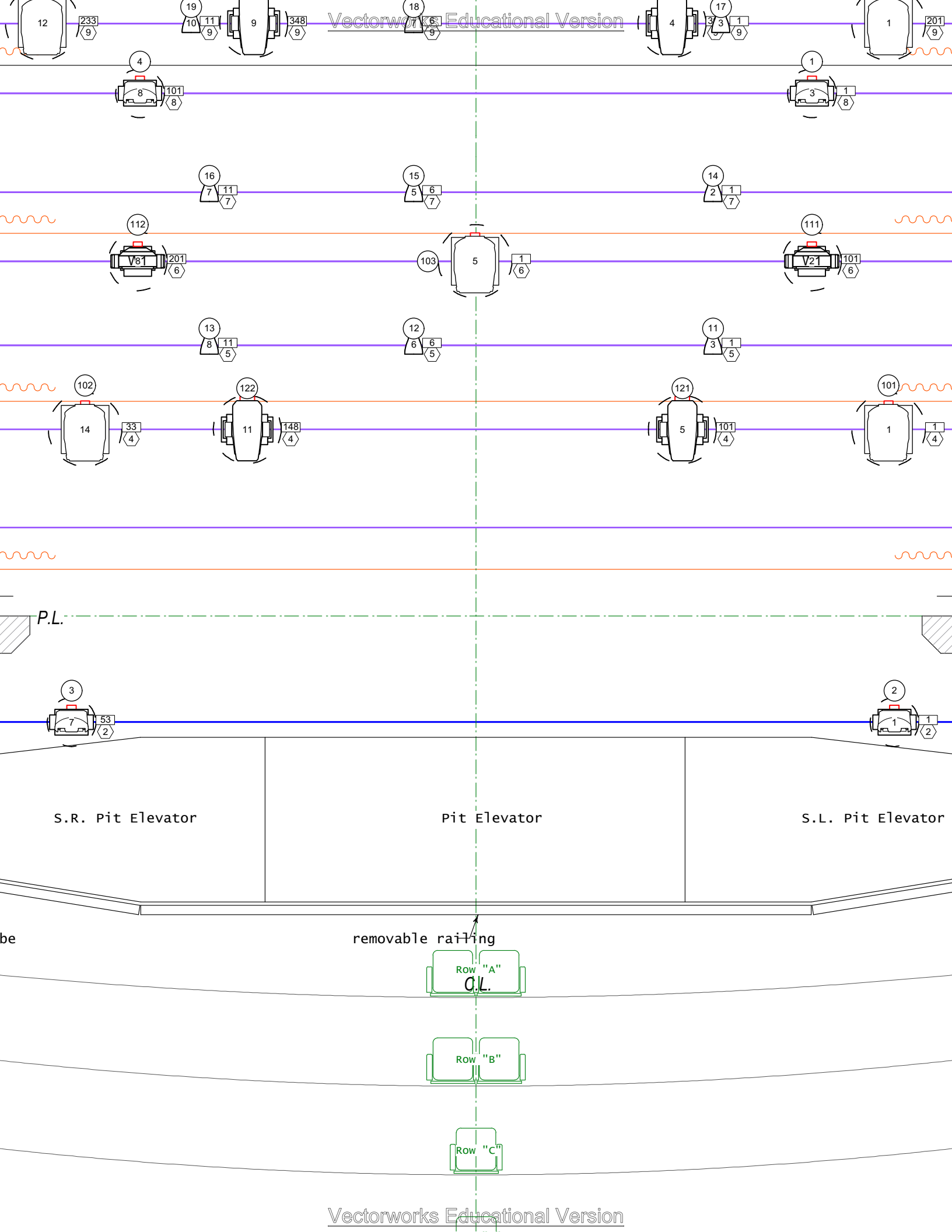
Vectorworks Educational Version
P.L.
S.R. Pit Elevator
Pit Elevator
S.L. Pit Elevator
removable railing
Row "A"
C.L.
Row "B"
Row "C"
Vectorworks Educational Version